Orbital-nozzle F1

Spare parts

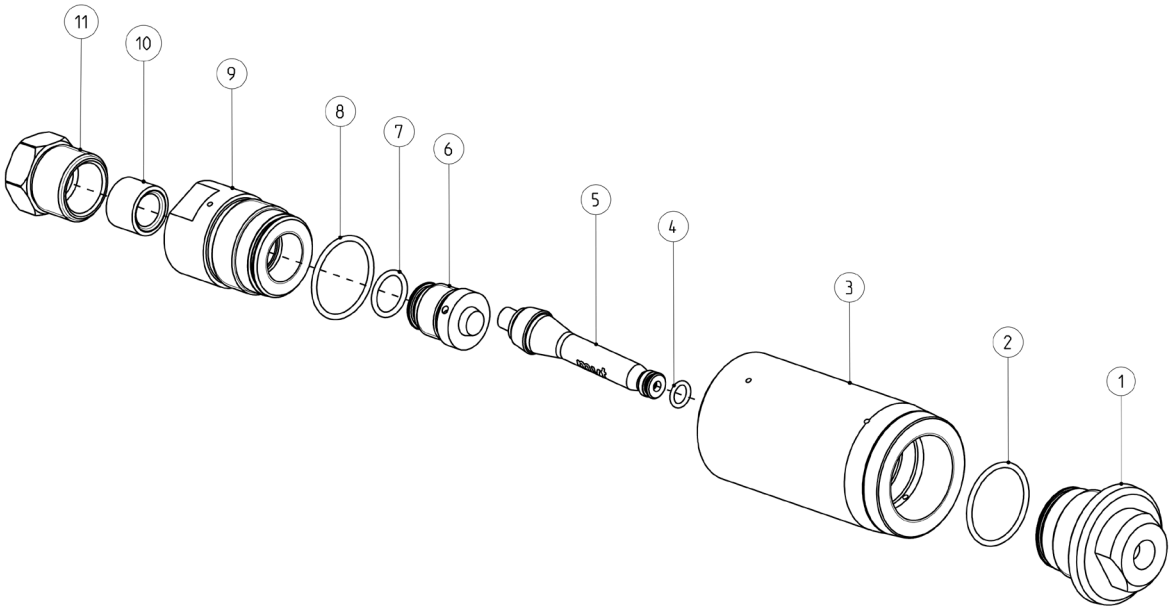

1. FRONT COVER	Art. NO.
	11458
2. O-Ring D28 x 2 for front cover	10274

9. INLET COVER	Art. NO.	CONNECTION THREAD
	12797	M26x1.5
	11500	M24x1.5 RH
	12819	9/16"-18 UNF LH HP
	12820	M14x1.5 LH HP
8. O-Ring D28 x 2 for inlet cover	10274	---

3. NOZZLE BODY F1	Art. NO.
	10340

10. / 11. ACCESSORIES FOR INLET COVER M26X1.5		
Art. NO.	DESCRIPTION	CONNECTION THREAD
12799	10. Pressure ring	9/16"-18 UNF LH HP
12800	10. Pressure ring	M14x1.5 LH HP
12798	11. Pressure screw	M26x1.5

5. REPAIR KIT TYPE F1		
	ART. NO.	ROTOR Ø
	32082	0.60
	32083	0.65
	32084	0.70
	32085	0.75
	32086	0.80
	32087	0.85
	32088	0.90
	32089	0.95
	32090	1.00
	32091	1.05
	32092	1.10
	32093	1.15
	32094	1.20
	32095	1.25
	32096	1.30
	32097	1.35
	32182	1.40
	32183	1.45
	32184	1.50
	32185	1.55
	32186	1.60
	32187	1.65
	32188	1.70
	32189	1.75
	32190	1.80
	32191	1.85
	32192	1.90
	32193	1.95
	32194	2.00
	32104	2.05
	32195	2.10
	32196	2.15
	32197	2.20
	32198	2.25
	32199	2.30
	32200	2.40
	32201	2.50
	32202	2.60
	32203	2.70
	32204	2.80
4. O-Ring D7.1 X 1.6 for repair kit	10271	---

6. DRIVING TUBE			
	Art. NO.	DRIVING TUBE Ø	NUMBER OF BORES
	11526	0.60	2
	11527	0.65	2
	11528	0.70	2
	10371	0.75	2
	10372	0.80	2
	10373	1.00	2
	10374	1.20	2
	10375	1.40	2
	10376	1.80	2
	10377	2.40	2
	10378	2.60	2
	10379	2.80	2
	10380	3.00	2
	10381	3.20	2
	10382	3.00	4
	10383	3.20	4
	10384	3.50	4
7. O-Ring D14 x 2 for driving tube	10272	---	---

Accessories

MOUNTING TOOL	
	Art. NO.
	10269

PROTECTIVE CAP			
Aluminium		Plastic	
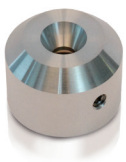	Art. NO.	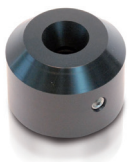	Art. NO.
	31858		31857